DURA-VANE II

Submittal

JDVA 7 / JDVB 7
Dura-Vane II Architectural
Copper/Aluminum and
Steel Elements

Specification

☐ **JDVA Slip Jointed Enclosure**

ENCLOSURE:

STYLE: Dura-Vane
OUTLET: Extruded Aluminum Grille
Pencil Proof

LENGTHS: 2'0" thru 8'0" in 6" Increments
MAT'L: ☐ 16 Ga. CRS (Std)
☐ 14 Ga. CRS (Opt'l)
☐ 16 Ga. Stainless Steel (Opt'l)
☐ 14 Ga. Stainless Steel (Opt'l)
☐ 14 Ga. Aluminum (Opt'l)
☐ 12 Ga. Aluminum (Opt'l)
HEIGHT: 7"
FINISH ☐ Baked Powder (Std)
☐ Baked Metallic (Opt'l)

ACCESSORIES:

☐ JDV Overlapping Type
All accessories have finger tabs at the bottom for easy installation.

ELEMENT:

TYPE: ☐ Cu/Al (Mechanically Expanded)
LENGTHS: 2'0" thru 12'6" in 1" Increments for 1" & 1-1/4" Cu.
2'0" thru 8'0" in 1" Increments for 3/4" Cu.

One End Flared (Std)

TYPE: ☐ IPS Steel (Mechanically Expanded)
LENGTHS: 2'0" thru 12'6" in 1" Increments
☐ NPT Thread both Ends (Std)
☐ Beveled Ends for Field Weld

See Catalog for Working Pressures

☐ **JDVB Slip Jointed Enclosure**

BACKPLATE:

TYPE: ☐ Partial B/P
LENGTHS: 8" Only
MAT'L: ☐ 20 Ga. Prepainted (Std)
☐ 18 Ga. Painted (Opt'l)

☐ Full Ht. B/P (Opt'l)
2'0" thru 8'0" in 6" increments
☐ 20 Ga. Galvannealed (Opt'l)
☐ 20 Ga. Painted (Opt'l)
☐ 18 Ga. Painted (Opt'l)

AIRSEAL:

☐ 1/8" x 3/8" Closed Cell (Opt'l)

BRACKETS:

☐ Water Brkt A-7
☐ Water Brkt B-7

☐ JDVA 7

ELEMENT TUBE SIZE	FIN SIZE HEIGHT x WIDTH	CRADLE NUMBER	A
3/4 COPPER	3 1/4 x 3 1/4	2	7"
1" COPPER	3 1/4 x 3 1/4	2	7 3/16
1 1/4 COPPER	3 1/4 x 3 1/4	1	6 5/8
1" STEEL	3 1/4 x 3 1/4	2	7 5/16
1 1/4 STEEL	3 1/4 x 3 1/4	1	6 13/16

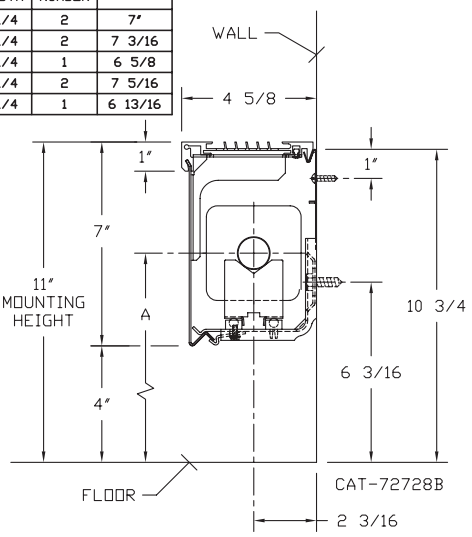

☐ JDVB 7

ELEMENT TUBE SIZE	FIN SIZE HEIGHT x WIDTH	CRADLE NUMBER	A
3/4 COPPER	3 5/8 x 4 1/4	2	7"
3/4 COPPER	4 1/4 x 4 1/4	3A	7 3/8
1" COPPER	3 5/8 x 4 1/4	2	7 3/16
1" COPPER	4 1/4 x 4 1/4	2	7 3/16
1 1/4 COPPER	3 5/8 x 4 1/4	2	7 5/16
1 1/4 COPPER	4 1/4 x 4 1/4	2	7 5/16
1" STEEL	4 1/4 x 4 1/4	2	7 5/16
1 1/4 STEEL	4 1/4 x 4 1/4	2	7 1/2
2" STEEL	4 1/4 x 4 1/4	1	7 1/4

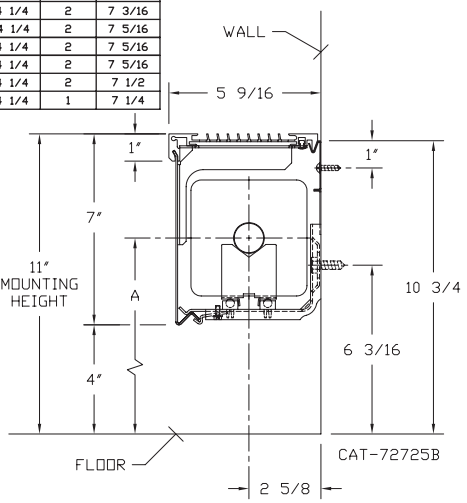

STERLING®
COMMERCIAL HYDRONIC PRODUCTS
MADE IN THE USA
260 North Elm St., Westfield, MA 01085
(413) 564-5535 Fax: (413) 562-8437
www.sterlingheat.com

6/2022

PROJECT: _____ **DATE:** _____
LOCATION: _____
ARCHITECT: _____
ENGINEER: _____
CONTRACTOR: _____
PO NUMBER: _____

STYLES JDVA 7 & JDVB 7 DURA-VANE II LOW PROFILE

COPPER/ALUMINUM ELEMENT RATINGS ALL RATINGS ARE BASED ON 3 FPS VELOCITY, 65° EAT					ENCL HEIGHT IN INCHES	ENCL DEPTH IN INCHES	MTG. HEIGHT IN INCHES	STEAM 215° FACTOR	HOT WATER (AVG.)								
									200°	190°	180°	170°	160°	150°	140°	130°	120°
TUBE SIZE	CATALOG DESIGNATION	FIN SIZE HEIGHT X WIDTH	FIN PER FT.	FIN THICKNESS IN INCHES					CORRECTION FACTORS FOR AVERAGE WATER TEMPERATURES								
								1.00	0.86	0.78	0.69	0.61	0.53	0.45	.40	.33	.26
3/4″	C3/4-33	3-1/4″ SQ.	32	.020	7	4-5/8	11	820	710	640	570	500	430	370	330	270	210
3/4″	C3/4-34	3-1/4″ SQ.	40	.020	7	4-5/8	11	1000	860	780	690	610	530	450	400	330	260
3/4″	C3/4-35	3-1/4″ SQ.	50	.020	7	4-5/8	11	1010	870	790	700	620	540	450	400	330	260
1″	C33	3-1/4″ SQ.	32	.020	7	4-5/8	11	840	720	660	580	510	450	380	340	280	220
1″	C34	3-1/4″ SQ.	40	.020	7	4-5/8	11	970	830	760	670	590	510	440	390	320	250
1″	C35	3-1/4″ SQ.	50	.020	7	4-5/8	11	980	840	760	680	600	520	440	390	320	250
1 1/4″	C133	3-1/4″ SQ.	32	.020	7	4-5/8	11	810	700	630	560	490	430	360	320	270	210
1 1/4″	C134	3-1/4″ SQ.	40	.020	7	4-5/8	11	930	800	730	640	570	490	420	370	310	240
1 1/4″	C135	3-1/4″ SQ.	50	.020	7	4-5/8	11	940	810	730	650	570	500	420	380	310	240
3/4″	C3/4-433	3-5/8″ x 4-1/4″	32	.020	7	5-9/16	11	1065	920	830	730	650	560	480	430	350	280
3/4″	C3/4-434	3-5/8″ x 4-1/4″	40	.020	7	5-9/16	11	1240	1070	970	860	760	660	560	500	410	320
3/4″	C3/4-435	3-5/8″ x 4-1/4″	50	.020	7	5-9/16	11	1320	1140	1030	910	810	700	590	530	440	340
1″	C433	3-5/8″ x 4-1/4″	32	.020	7	5-9/16	11	1150	990	900	790	700	610	520	460	380	300
1″	C434	3-5/8″ x 4-1/4″	40	.020	7	5-9/16	11	1260	1080	980	870	770	670	570	500	420	330
1″	C435	3-5/8″ x 4-1/4″	50	.020	7	5-9/16	11	1360	1170	1060	940	830	720	610	540	450	350
1-1/4″	C1433	3-5/8″ x 4-1/4″	32	.020	7	5-9/16	11	1120	960	870	770	680	590	500	450	370	290
1-1/4″	C1434	3-5/8″ x 4-1/4″	40	.020	7	5-9/16	11	1240	1070	970	860	760	660	560	500	410	320
1-1/4″	C1435	3-5/8″ x 4-1/4″	50	.020	7	5-9/16	11	1330	1140	1040	920	810	700	600	530	440	350
3/4″	C3/4-43	4-1/4″ SQ.	32	.020	7	5-9/16	11	1250	1080	980	860	760	660	560	500	410	330
3/4″	C3/4-44	4-1/4″ SQ.	40	.020	7	5-9/16	11	1360	1170	1060	940	830	720	610	540	450	350
3/4″	C3/4-45	4-1/4″ SQ.	50	.020	7	5-9/16	11	1380	1190	1080	950	840	730	620	550	460	360
1″	C43	4-1/4″ SQ.	32	.020	7	5-9/16	11	1260	1080	980	870	770	670	570	500	420	330
1″	C44	4-1/4″ SQ.	40	.020	7	5-9/16	11	1390	1200	1080	960	850	740	630	560	460	360
1″	C45	4-1/4″ SQ.	50	.020	7	5-9/16	11	1410	1210	1100	970	860	750	630	560	470	370
1-1/4″	C143	4-1/4″ SQ.	32	.020	7	5-9/16	11	1230	1060	960	850	750	650	550	490	410	320
1-1/4″	C144	4-1/4″ SQ.	40	.020	7	5-9/16	11	1370	1180	1070	950	840	730	620	550	450	360
1-1/4″	C145	4-1/4″ SQ.	50	.020	7	5-9/16	11	1390	1200	1080	960	850	740	630	560	460	360

Copper tube furnished flared one end standard.

STEEL ELEMENT RATINGS ALL RATINGS ARE BASED ON 3 FPS VELOCITY, 65° EAT					ENCL HEIGHT IN INCHES	ENCL DEPTH IN INCHES	MTG. HEIGHT IN INCHES	STEAM 215° FACTOR	HOT WATER (AVG.)								
									200°	190°	180°	170°	160°	150°	140°	130°	120°
TUBE SIZE	CATALOG DESIGNATION	FIN SIZE HEIGHT X WIDTH	FIN PER FT.	FIN THICKNESS IN INCHES					CORRECTION FACTORS FOR AVERAGE WATER TEMPERATURES								
								1.00	0.86	0.78	0.69	0.61	0.53	0.45	.40	.33	.26
1″	S33	3-1/4″ SQ.	32	.032	7	4-5/8	11	780	670	610	540	480	410	350	310	260	200
1″	S34	3-1/4″ SQ.	40	.032	7	4-5/8	11	860	740	670	590	520	460	390	340	280	220
1″	S35	3-1/4″ SQ.	50	.032	7	4-5/8	11	900	770	700	620	550	480	410	360	300	230
1-1/4″	S133	3-1/4″ SQ.	32	.032	7	4-5/8	11	770	660	600	530	470	410	350	310	250	200
1-1/4″	S134	3-1/4″ SQ.	40	.032	7	4-5/8	11	870	750	680	600	530	460	390	350	290	230
1-1/4″	S135	3-1/4″ SQ.	50	.032	7	4-5/8	11	885	760	690	610	540	470	400	350	290	230
1″	S43	4-1/4″ SQ.	32	.032	7	5-9/16	11	1100	950	860	760	670	580	500	440	360	290
1″	S44	4-1/4″ SQ.	40	.032	7	5-9/16	11	1210	1040	940	830	740	640	540	480	400	310
1″	S45	4-1/4″ SQ.	50	.032	7	5-9/16	11	1295	1110	1010	890	790	690	580	520	430	340
1-1/4″	S143	4-1/4″ SQ.	32	.032	7	5-9/16	11	1010	870	790	700	620	540	450	400	330	260
1-1/4″	S144	4-1/4″ SQ.	40	.032	7	5-9/16	11	1210	1040	940	830	740	640	540	480	400	310
1-1/4″	S145	4-1/4″ SQ.	50	.032	7	5-9/16	11	1270	1090	990	880	770	670	570	510	420	330
2″	S242	4-1/4″ SQ.	25	.032	7	5-9/16	11	950	820	740	660	580	500	430	380	310	250
2″	S243	4-1/4″ SQ.	32	.032	7	5-9/16	11	1130	970	880	780	690	600	510	450	370	290

NPT threads furnished on steel elements. Please use domestic fittings for proper installation.

DESIGN DATA

COMMERCIAL FINNED TUBE CHARTS FOR RATING CORRECTIONS

For assistance with ratings and selection, please use our online Specifier.

CORRECTION FACTORS FOR WATER TEMPERATURES AND AIR TEMPERATURES OTHER THAN STANDARD

AVERAGE WATER TEMP. °F	ENTERING AIR TEMPERATURE °F														
	45	55	STD 65	70	75	80	85	90	95	100	110	120	130	140	150
90	.19	.13	.11	.06											
100	.25	.19	.15	.11	.08	.06									
110	.31	.25	.20	.16	.13	.11	.08	.06							
120	.38	.31	.26	.21	.19	.16	.13	.11	.08	.06					
130	.45	.38	.33	.28	.25	.21	.19	.16	.13	.11	.06				
140	.53	.45	.40	.34	.31	.28	.25	.21	.19	.16	.11	.06			
150	.61	.53	.45	.41	.38	.34	.31	.28	.25	.21	.16	.11	.06		
160	.69	.61	.53	.49	.45	.41	.38	.34	.31	.28	.21	.16	.11	.06	
170	.77	.69	.61	.57	.53	.49	.45	.41	.38	.34	.28	.21	.16	.11	.06
180	.86	.77	.69	.65	.61	.57	.53	.49	.45	.41	.34	.28	.21	.16	.11
190	.95	.86	.78	.73	.69	.65	.61	.57	.53	.49	.41	.34	.28	.21	.16
200	1.05	.95	.86	.82	.77	.73	.69	.65	.61	.57	.49	.41	.34	.28	.21
210	1.14	1.05	.95	.91	.86	.82	.77	.73	.69	.65	.57	.49	.41	.34	.28
▶ 215 (STD.)	1.19	1.09	1.00	.95	.91	.86	.82	.77	.73	.69	.61	.53	.45	.38	.31
220	1.24	1.14	1.05	1.00	.95	.91	.86	.82	.77	.73	.65	.57	.49	.41	.34
230	1.34	1.24	1.14	1.09	1.05	1.00	.95	.91	.86	.82	.73	.65	.57	.49	.41
240	1.44	1.34	1.25	1.19	1.14	1.09	1.05	1.00	.95	.91	.82	.73	.65	.57	.49
250	1.55	1.44	1.34	1.29	1.24	1.19	1.14	1.09	1.05	1.00	.91	.82	.73	.65	.57
260	1.66	1.55	1.44	1.39	1.34	1.29	1.24	1.19	1.14	1.09	1.00	.91	.82	.73	.65
270	1.76	1.66	1.55	1.50	1.44	1.39	1.34	1.29	1.24	1.19	1.09	1.00	.91	.82	.73
280	1.87	1.76	1.66	1.60	1.55	1.50	1.44	1.39	1.34	1.29	1.19	1.09	1.00	.91	.82
290	1.99	1.87	1.76	1.71	1.66	1.60	1.55	1.50	1.44	1.39	1.29	1.19	1.09	1.00	.91
300	2.10	1.99	1.87	1.82	1.76	1.71	1.66	1.60	1.55	1.50	1.39	1.29	1.19	1.09	1.00

CORRECTION FACTORS FOR STEAM PRESSURES AND AIR TEMPERATURES OTHER THAN STANDARD

STEAM PRESSURE		ENTERING AIR TEMPERATURE °F														
GAUGE	ABS. PSI	TEMP. °F	45	55	STD 65	70	75	80	85	90	100	110	120	130	140	150
(VAC) 15" HG	7.32	178.9	0.90	0.80	0.70	0.65	0.60	0.56	0.51	0.45	0.39	0.32	0.25	0.18	0.13	0.08
(VAC) 10"	9.78	192.2	1.02	0.91	0.81	0.76	0.71	0.66	0.62	0.55	0.48	0.40	0.33	0.26	0.20	0.14
(VAC) 5"	12.25	202.9	1.11	1.00	0.90	0.85	0.79	0.75	0.70	0.63	0.56	0.48	0.40	0.33	0.27	0.20
0 PSI	14.696	212.0	1.19	1.09	0.97	0.92	0.87	0.82	0.77	0.70	0.63	0.54	0.46	0.38	0.31	0.25
▶ .899	15.595	215.0	1.22	1.11	1.00	0.95	0.90	0.84	0.80	0.75	0.65	0.57	0.48	0.40	0.33	0.26
5	19.70	227.1	1.34	1.22	1.11	1.05	1.00	0.95	0.90	0.81	0.75	0.66	0.57	0.49	0.41	0.34
10	24.70	239.4	1.45	1.33	1.22	1.17	1.11	1.05	1.00	0.91	0.85	0.75	0.66	0.58	0.50	0.42
15	29.70	249.8	1.55	1.43	1.31	1.26	1.20	1.14	1.09	1.00	0.94	0.84	0.75	0.66	0.57	0.49
20	34.70	258.5	1.63	1.52	1.40	1.33	1.28	1.23	1.17	1.07	1.02	0.92	0.82	0.73	0.64	0.55
25	39.70	266.8	1.71	1.59	1.47	1.41	1.36	1.30	1.25	1.15	1.09	0.98	0.89	0.80	0.71	0.62
30	44.70	274.0	1.78	1.66	1.54	1.48	1.42	1.37	1.31	1.21	1.15	1.05	0.95	0.85	0.76	0.68
40	54.70	286.7	1.91	1.79	1.66	1.61	1.54	1.49	1.43	1.32	1.27	1.16	1.06	0.97	0.87	0.78
50	64.70	297.7	2.02	1.90	1.77	1.71	1.65	1.60	1.54	1.42	1.37	1.26	1.16	1.06	0.96	0.87
60	74.70	307.3	2.10	2.00	1.87	1.81	1.75	1.69	1.63	1.51	1.47	1.35	1.25	1.15	1.05	0.95
70	84.70	316.0	2.20	2.09	1.95	1.89	1.83	1.77	1.71	1.59	1.55	1.44	1.33	1.23	1.12	1.03
80	94.70	323.9	2.27	2.17	2.03	1.97	1.91	1.85	1.80	1.69	1.63	1.52	1.41	1.31	1.20	1.10
90	104.70	331.2	2.36	2.24	2.11	2.05	1.98	1.93	1.87	1.74	1.70	1.59	1.48	1.38	1.28	1.17
100	114.70	337.9	2.43	2.31	2.18	2.11	2.05	2.00	1.94	1.81	1.77	1.65	1.54	1.44	1.33	1.23
125	139.70	352.9	2.59	2.47	2.33	2.27	2.21	2.16	2.10	1.96	1.92	1.80	1.69	1.59	1.48	1.38
150	164.70	365.9	2.73	2.62	2.47	2.43	2.35	2.29	2.23	2.08	2.05	1.94	1.82	1.72	1.61	1.51
175	189.70	377.4	2.86	2.74	2.60	2.54	2.47	2.41	2.35	2.21	2.17	2.05	1.95	1.85	1.73	1.63
200	214.70	387.8	2.95	2.85	2.71	2.63	2.58	2.52	2.47	2.31	2.29	2.17	2.06	1.96	1.84	1.75

From Keenan and Keyes — Linear Interpolation. NOTE: Gauge pressure should be corrected for altitude.

Rate of pitch for steam ½"drop over 20-foot run.

DESIGN DATA

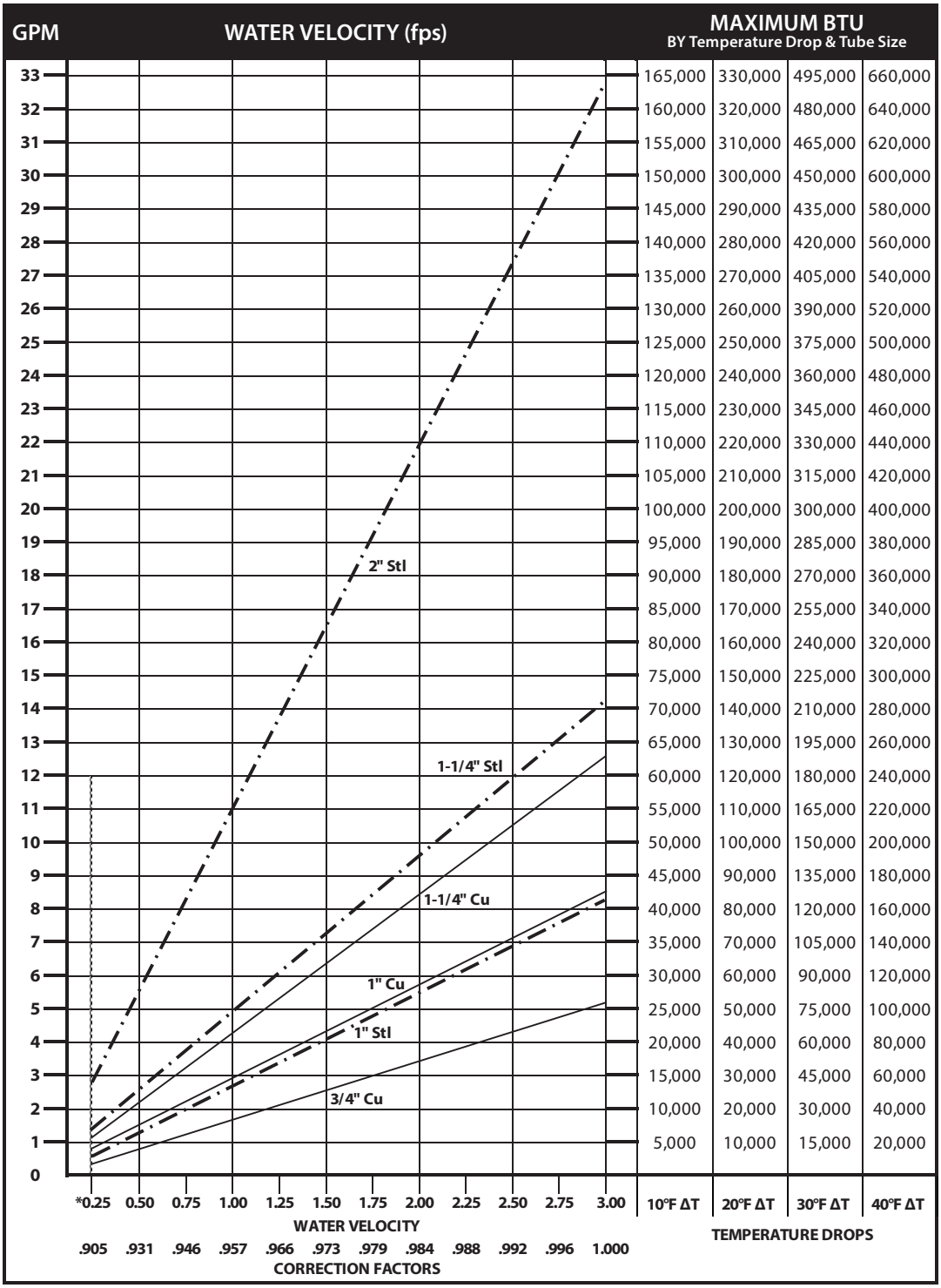

GPM	10°F ΔT	20°F ΔT	30°F ΔT	40°F ΔT
33	165,000	330,000	495,000	660,000
32	160,000	320,000	480,000	640,000
31	155,000	310,000	465,000	620,000
30	150,000	300,000	450,000	600,000
29	145,000	290,000	435,000	580,000
28	140,000	280,000	420,000	560,000
27	135,000	270,000	405,000	540,000
26	130,000	260,000	390,000	520,000
25	125,000	250,000	375,000	500,000
24	120,000	240,000	360,000	480,000
23	115,000	230,000	345,000	460,000
22	110,000	220,000	330,000	440,000
21	105,000	210,000	315,000	420,000
20	100,000	200,000	300,000	400,000
19	95,000	190,000	285,000	380,000
18	90,000	180,000	270,000	360,000
17	85,000	170,000	255,000	340,000
16	80,000	160,000	240,000	320,000
15	75,000	150,000	225,000	300,000
14	70,000	140,000	210,000	280,000
13	65,000	130,000	195,000	260,000
12	60,000	120,000	180,000	240,000
11	55,000	110,000	165,000	220,000
10	50,000	100,000	150,000	200,000
9	45,000	90,000	135,000	180,000
8	40,000	80,000	120,000	160,000
7	35,000	70,000	105,000	140,000
6	30,000	60,000	90,000	120,000
5	25,000	50,000	75,000	100,000
4	20,000	40,000	60,000	80,000
3	15,000	30,000	45,000	60,000
2	10,000	20,000	30,000	40,000
1	5,000	10,000	15,000	20,000
0				

*Do not design below .25 fps.

DYNAMIC FORMULAS

$$BTU = GPM \times 500 \times TD$$

$$GPM = \left(\frac{BTU}{500}\right) \div TD$$

$$TD = \left(\frac{BTU}{500}\right) \div GPM$$

Pressure Drop at Given Water Velocities (Feet of Water per 100 ft. of pipe) based on Hazen - Williams calculation

Nominal Pipe Size	Water Velocity (ft/sec)											
	0.25	0.50	0.75	1.00	1.25	1.50	1.75	2.00	2.25	2.50	2.75	3.00
3/4" Copper	0.06	0.20	0.42	0.72	1.09	1.53	2.04	2.61	3.25	3.95	4.71	5.53
1" Copper	0.04	0.15	0.32	0.54	0.81	1.14	1.52	1.94	2.42	2.94	3.50	4.11
1 1/4" Copper	0.03	0.12	0.25	0.43	0.64	0.90	1.20	1.54	1.92	2.33	2.78	3.26
1" Steel	0.04	0.15	0.32	0.54	0.81	1.14	1.52	1.95	2.42	2.94	3.51	4.12
1 1/4" Steel	0.03	0.11	0.23	0.40	0.60	0.84	1.12	1.44	1.79	2.17	2.59	3.05
2" Steel	0.02	0.07	0.14	0.25	0.37	0.52	0.69	0.89	1.10	1.34	1.60	1.88

DESIGN DATA

GUARANTEED WORKING PRESSURES

1" IPS — 780 at Temperatures up to 650˚F.
1-1/4" IPS — 660 at Temperatures up to 650˚F.
2" IPS — 405 at Temperatures up to 650˚F.
1-1/4" CU — 194 at Temperatures up to 300˚F.
1" CU 204 at Temperatures up to 300˚F.
3/4" CU 218 PSI at Temperatures up to 300˚F.

MAXIMUM PRESSURES AT OTHER TEMPERATURES ARE AVAILABLE UPON REQUEST.

Pipe Water Capacities and Quantities Circulated at Velocity of 3 Feet Per Second

Nominal Pipe Size	Pipe I.D. (inches)	Gals Per Lin. Ft.	GPM @ 3' per sec Velocity
3/4" Copper	0.835	0.028	5.12
1" Copper	1.077	0.047	8.52
1 1/4" Copper	1.315	0.071	12.70
1" Steel	1.075	0.047	8.49
1 1/4" Steel	1.395	0.079	14.29
2" Steel	2.115	0.183	32.85

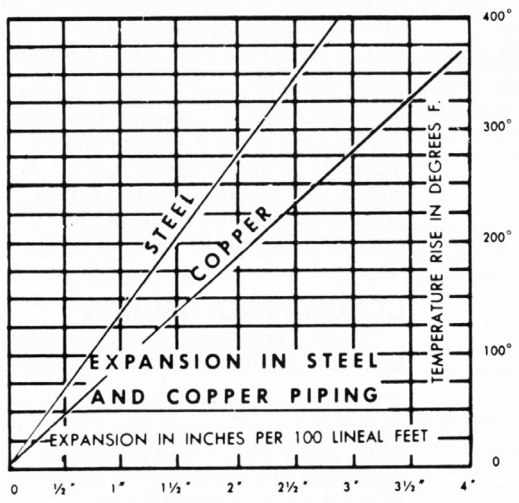

Glycol Correction Factors

Fluid Temperature 200°F

% Solution	Ethylene Glycol	Propylene Glycol
20	.952	.988
30	.921	.968
40	.888	.943
50	.852	.912

Fluid Temperature 180°F

% Solution	Ethylene Glycol	Propylene Glycol
20	.946	.982
30	.913	.961
40	.879	.934
50	.842	.902

Fluid Temperature 140°F

% Solution	Ethylene Glycol	Propylene Glycol
20	.934	.97
30	.898	.946
40	.861	.916
50	.821	.881

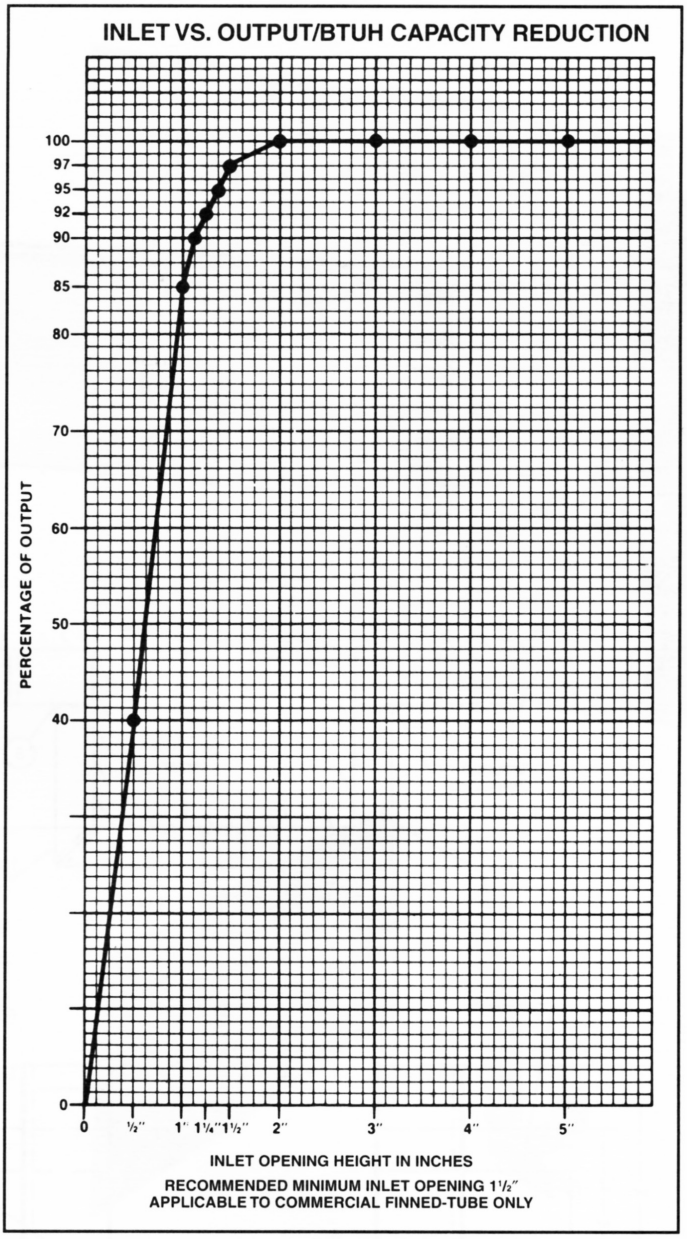

ALTITUDE FACTORS

Approximate factors for convective heat value at varying altitudes

Altitude	Ferrous Units	Copper Alum. Units
Sea Level	1.000	1,000
1,000 ft.	.984	.969
2,000 ft.	.968	.938
3,000 ft.	.952	.908
4,000 ft.	.936	.878
5,000 ft.	.920	.850
6,000 ft.	.904	.822
7,000 ft.	.889	.795
8,000 ft.	.874	.768
9,000 ft.	.859	.743
10,000 ft.	.844	.718
15,000 ft.	.771	.603
20,000 ft.	.703	.502